MACROBLADE 84

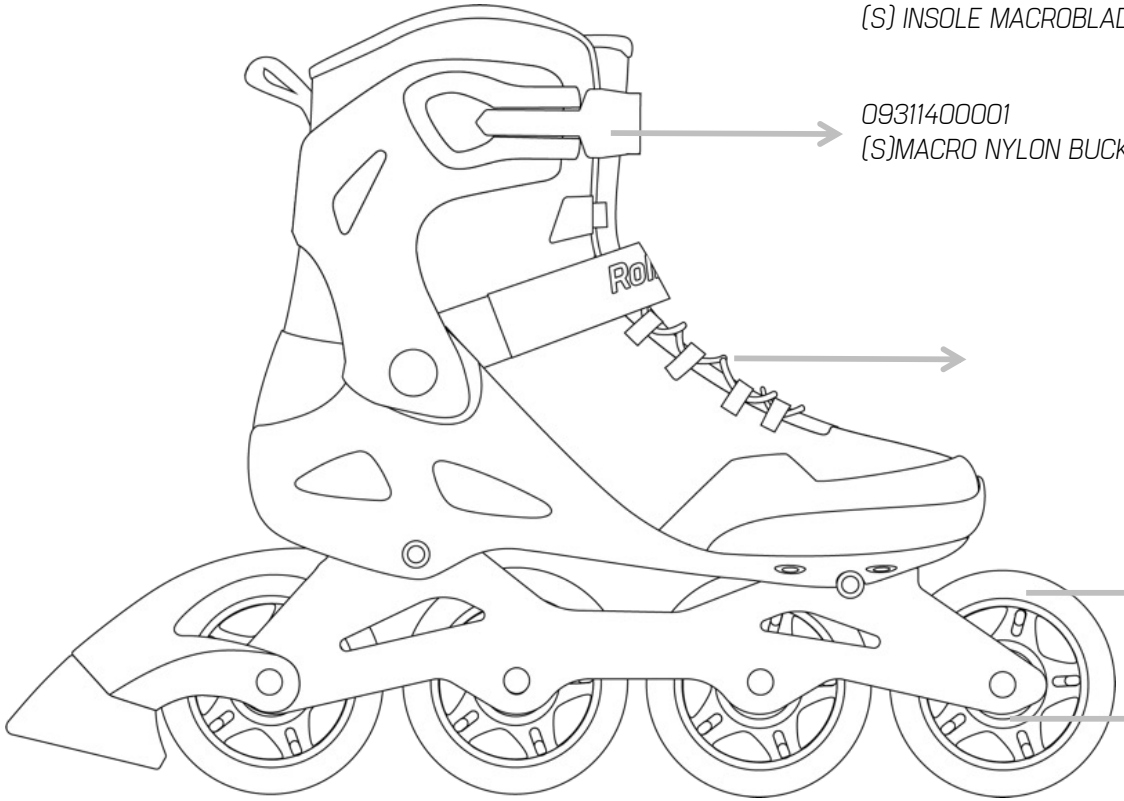

09310000100
(S) INSOLE MACROBLADE PSI (1PR)

09310100100
(S)FOOTBOARD SIZER (1PR)

09311400001
(S)MACRO NYLON BUCKLE (5PRS) size 230 & 250 (250+)

06953100080
84mm/SG7 WHEEL/BEARING XT
06953400080
84mm/84A WHEELS XT (8PCS)
06635700100
HYDROGEN 84/85A (6PCS)

06228600000
TWINCAM ILQ-7 PLUS BEARINGS
06228500T78
TWINCAM ILQ-9 PRO BEARINGS

MAX 4x84mm

MISCELLANEOUS
068Z0100007-BLADETOOL PRO
068Z0300394 - BLADETOOL

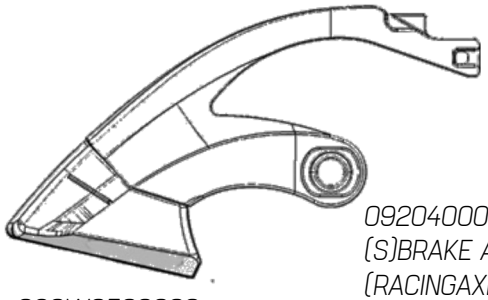

09302900001
(S)BRAKE SUPP.MACRO/SPARK/SIRIO
84/80 (1PC)

09204000001
(S)BRAKE AXLE
(RACINGAXLE) (10PCS)

068W0500000
BRAKE PAD STD (1PCS)
09207700100
(S)BRAKE PAD BOX (50PCS)

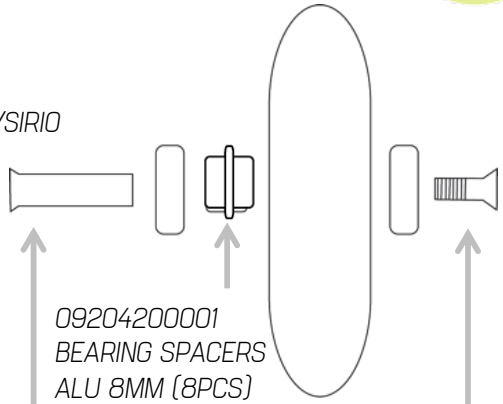

09204200001
BEARING SPACERS
ALU 8MM (8PCS)

09201900000
WHEEL AXLES 2.0 ALU FRAMES (9PCS)

07370800749	MACROBLADE 84
07370900390	MACROBLADE 84 W